optimize! softing

MPTL Testing – Testing of Modular Plug Terminated Links

New applications, new cabling structures

For a long time, structured cabling was reserved for use in communications networks as the interconnectivity of active devices which exchanged their respective protocols. Today's applications are becoming increasingly diverse. In the past, a network was only used to link computers, but nowadays far more applications, not just additional telephones, are managed via the same infrastructure. In the past, the design of a transmission link was clearly defined. It consisted of a fixed installation cable terminated at both ends with passive components, mostly RJ45 sockets, which were connected by flexible connection cords (patch cords), establishing for example the connection between a switch and a terminal device. With the advent of Ethernet in the industrial environment, "Industry 4.0", this form of classical transmission line has already been dissolved. For industrial cabling, a direct connection has just been standardized, in which plugs are mounted directly on the installation cable, instead of installing sockets plus patch cords for the connection of active components. This new form of transmission link is called "End-to-End Link" ("E2E"). The IoT, the Internet of Things, where more and more equipment becomes network-enabled, extends the number of structures of communication cabling with another type of transmission link, the so-called "direct connect" or in technical term the American ANSI/TIA draft standard "Modular Plug Terminated Link" (MPTL).

MPTL

A MPTL features a socket on the patch panel as termination, the opposite side of the link features a plug, similar as the E2E. This structure is used when e. g. IP-capable devices are permanently installed, such as LED lighting, building automation elements or, traditionally, access points and surveillance cameras. The installation cable is plugged directly into the terminal device without the addition of a socket plus patch cable. Some advantages of such a connection concept are obvious: The omission of the data socket and the patch cable eliminates two risk components, which either inadvertently or deliberately can lead to the interruption of data traffic. Another important aspect is the elimination of electrical transients, which could add unwanted load when transmitting Power over Ethernet (PoE). Poor accessibility in certain installations, e. g. for ceiling LEDs or aesthetic reasons for visible components, e. g. access points, also speak for this direct connection technology.

The disadvantage of this new MPTL transmission link has been the lack of standardization, which unambiguously defines the performance limit values and also describes the correct testing and certification processes. Up to now, wild combinations of Permanent Link/PL and/or Channel Link /CL, often by using additional "auxiliary measurement cables", had been used to test those cabling configurations, therefore no reliable results had been achieved. Both ANSI/TIA as well as ISO/IEC have adapted to this shortcoming by launching new standards that summarizes the performance requirements for MPTL and specifies the measurement setup.

Normative references

In the past, two link topologies have been mentioned in the cabling standards ANSI/TIA 568 and ISO/IEC 11801 (and its regional editions), Permanent Link (fixed installation link) and Channel Link (whole transmission link). The following additional standards and technical reports have been issued in the last years to cover cabling configurations that are not covered by Channel Link or permanent link definitions.

Name	Reference	Short description
Modular Plug terminated link MPTL	ISO/IEC TR 11801-9910 EIA/TIA 568.2-D (Annex F)	Cabling with a socket on one end and a plug on the other end. May contain a consolidation point.
End-to-End Link E2E Link	ISO/IEC TR 11801-9902	Solid or stranded cabling with plugs at the ends. May consist of up to 5 segments.
Direct Attach Cabling	ISO/IEC TR 11801-9907	Cabling with plugs at each end to directly connect equipment.

IEC has introduced the "E2E" link on the international level by means of a technical report (ISO/IEC TR 11801 9902) and associated measuring specifications (ISO/IEC 14763 4). The E2E configurations are described in a separate application note.

Direct attach cabling is a special form of cabling to connect 2 devices with each other.

MPTL is both covered in ISO as well as TIA. MPTL is described as an installation link, which features a jack on the distributor panel side, and a plug on the terminal device side that is directly connected into an active terminal device. In between, there may also be a Consolidation Point (CP). The maximum length of an MPTL for TIA is 90 meters, ISO does not specify a maximum length.

This type of link is tested against the Permanent Link limit values. Due to the different link terminations, different measurement adapters are used on the LOCAL and REMOTE measuring instruments. On the distributor panel side, a Permanent Link adapter is used to measure the socket, while a patch cable measurement adapter is used on the terminal device side *(see Figure 1)* to accept the plug of the MPTL link. Details on the measurements can be found in the next section.

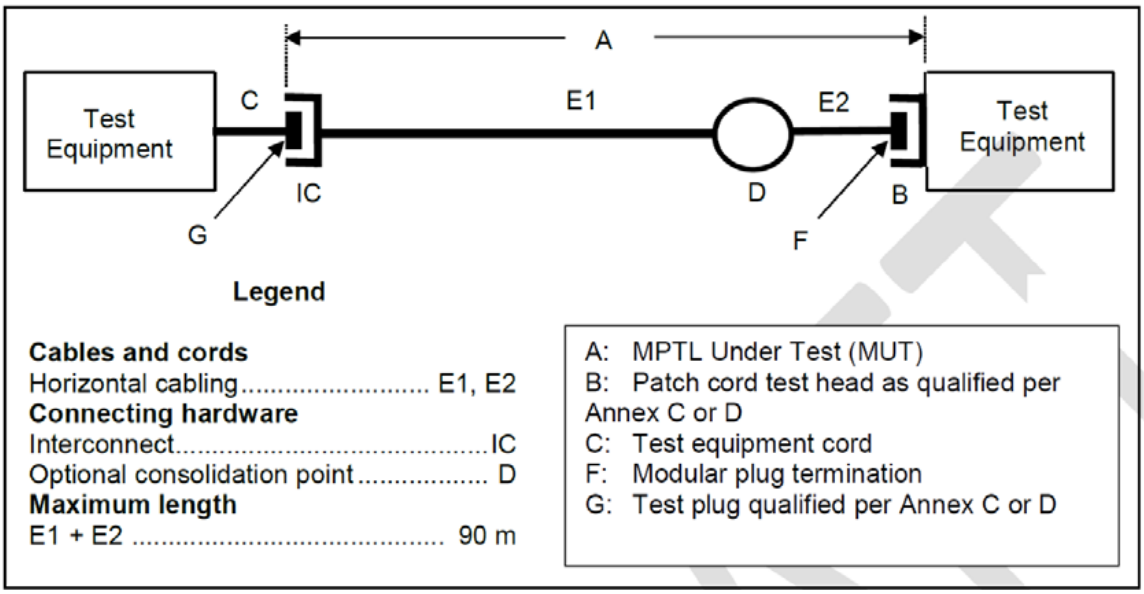

Figure 1: Test Setup for Modular Plug terminated links from ANSI/TIA PN-568.2-D

Measurement types

General Requirements

Since MPTL links have been installed for a while now, the question that has always been raised is about the correct measurement of such hybrid links. Unlike the classic topologies, the termination components differ and force the mix of measurement adapters or upstream conversion of the mating connectors.

Measurements using Channel Link adapters

One method of measurements that was often used was using Channel Link adapters *(see Figure 2)*. On the distribution panel, a high quality patch cable was used. On the terminal device end, the terminator plug was simply plugged into the measurement adapter and the link was evaluated against the Channel Link limits. However, the result obtained is not satisfying, because this measurement method introduced many errors. The Channel Link measurement is assumed to include the entire transmission Channel Link, so on the distribution panel side, the measurement patch cable would have to be left at place. Removing that cable from the distributor panel invalidates the measurement. The larger measurement error occurs, however, at the plug. If the plug of the cable is plugged into a Channel Link measurement adapter, it will be masked out of the measurement according to the Channel Link definition. But since its electrical properties and the quality of plug termination are very important in this cabling structure, an important part of the whole link is not measured.

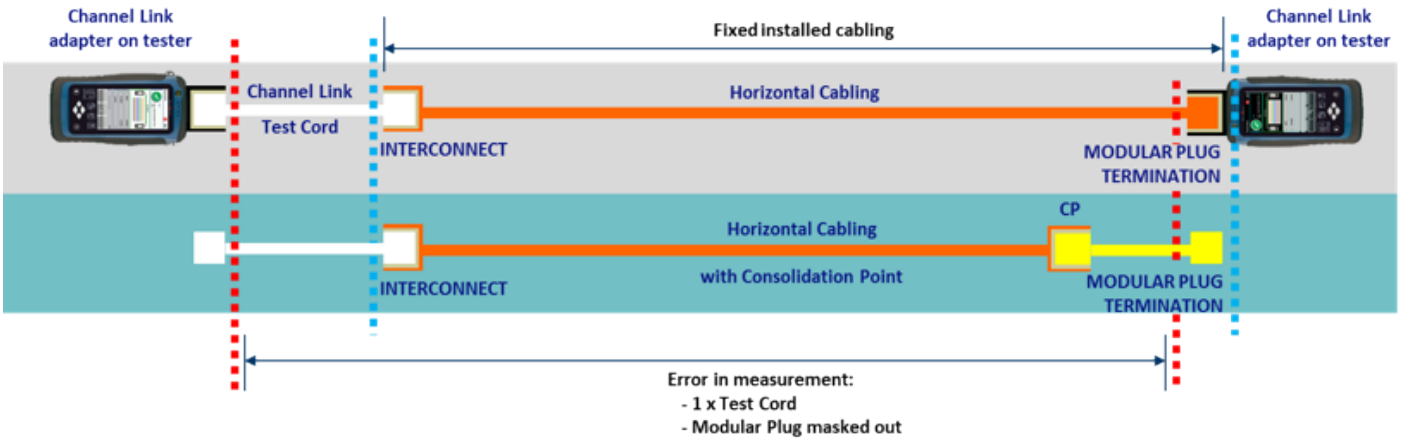

Figure 2: Measurements using Channel Link adapters

Measurements using a combination of Permanent Link and Channel Link adapters

In order to minimize the errors at least on the distributor panel side, different types of measurement adapters where mixed. For example, a Permanent Link adapter was used at the distributor panel instead of the Channel Link adapter in order to set at least the measurement reference plane correctly at that side of the link. However, this method still does not measure the plug at the Channel Link adapter.

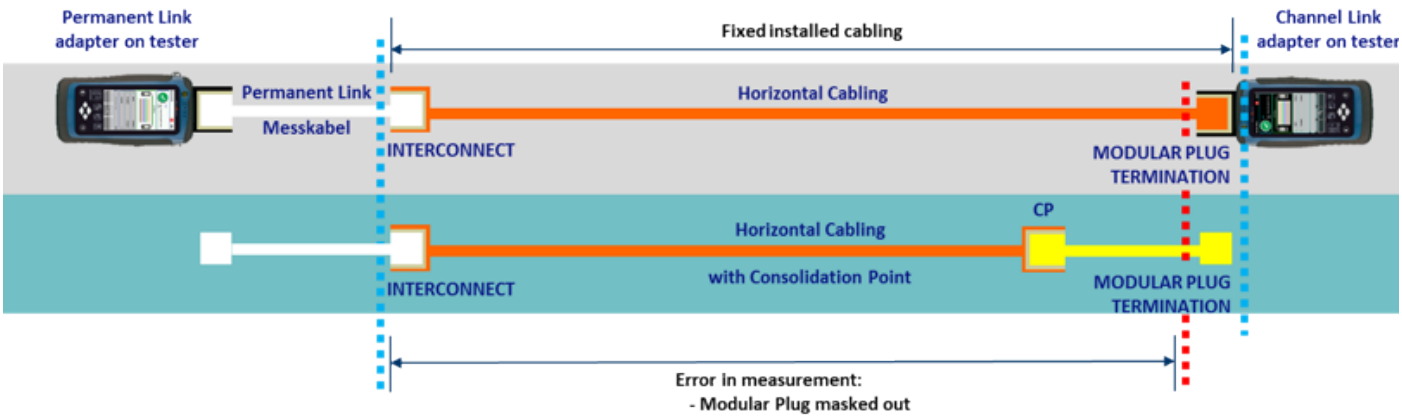

Figure 3: Measurements using combination from Permanent Link and Channel Link adapters

Measurements using a combination of Permanent and Channel Link adapters with special auxiliary cable

In order to prevent the masking of the first and last plug, special auxiliary cables have been used. There is still a Channel Link adapter on the terminal device side, but a short intermediate cable is inserted between the connector on the installation cable and the measurement adapter. This cable has a RJ45 standard plug on the side of the testing device, which disappears in the Channel Link adapter, but on the other side there is a special standardized reference socket into which the plug of the transmission link now is connected to. This reference socket on the auxiliary cable complies with the requirements of the standards for measuring connection cords (patch cables) and ensures that the characteristics of the connector on the installation cable are not hidden. However, this additional cable again introduces its own measuring errors, e. g. an additional length in the overall length measurement.

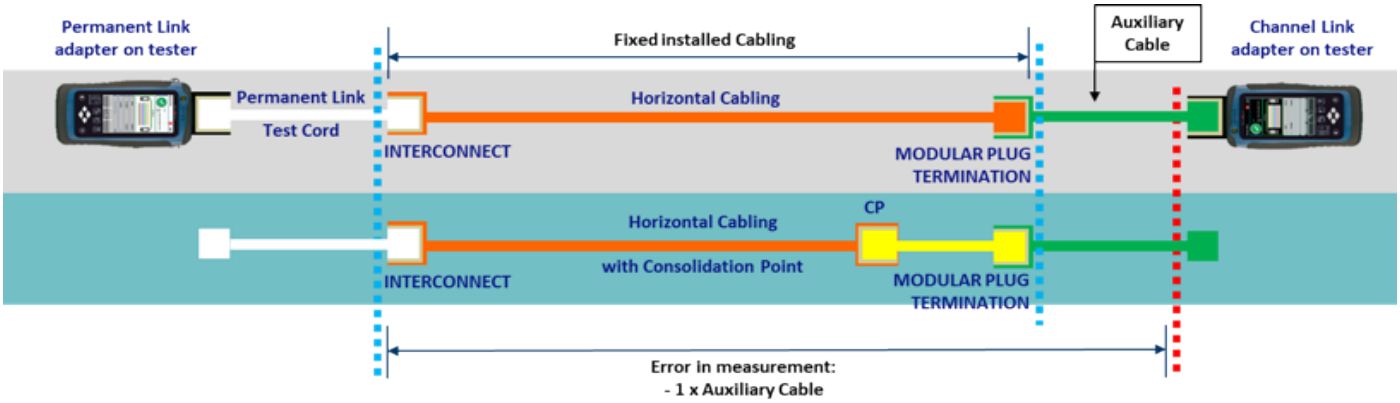

Figure 4: Measurements using combination from Permanent Link and Channel Link adapters with special auxiliary cable

Measurements using a combination of Permanent and Patch Cord Test adapters

The standard PN-568.2-D and ISO/IEC 11801-9910 describe the most accurate method for measuring an MPTL. Here, again a Permanent Link adapter is used at the distributor panel and a Patch Cord Test adapter is used at the terminal device end. Patch Cord Test adapters are typically used for qualifying connection cords. In this adapter, the above-mentioned reference socket is integrated (removable). Compared to Channel Link adapters, this type of adapter shifts the reference plane to ensure the connector is part of the measurement and prevents the error of an additional cable as described in the measurement method above.

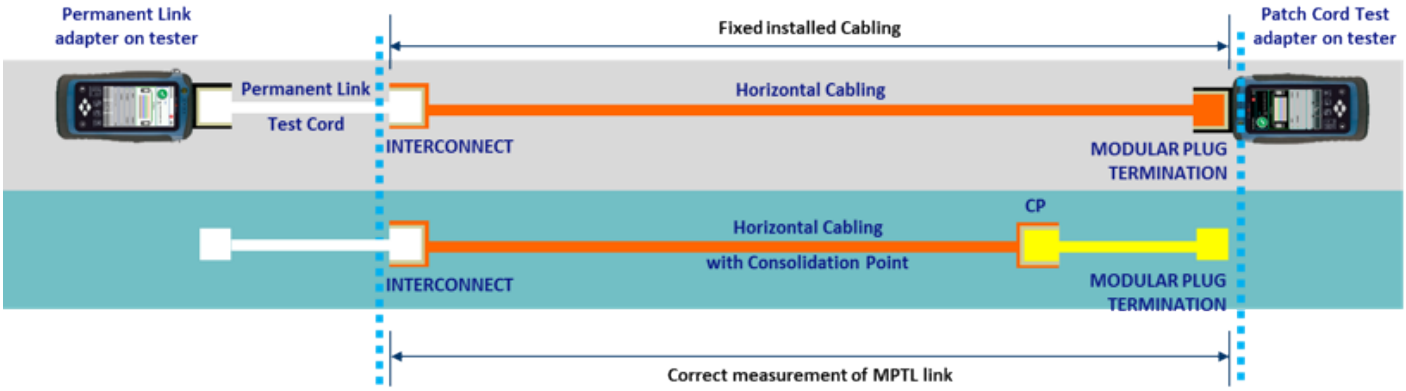

Figure 5: Measurements using combination from Permanent Link and Patch Cord Test adapters

Required hardware for the WireXpert series

The WireXpert 4500 (P/N 228070), WireXpert 500-PLUS (P/N 228144), and WireXpert 500 (P/N 228071) models are ready to measure MPTL links. The WireXpert 500-MMEF (P/N 228145), WireXpert 500-SM (P/N 228146), WireXpert 500-QUAD (P/N 228147), and WireXpert 500-MPO (P/N 228148) models only support fiber optic measurements, but can be upgraded with a license key and respective calibration for copper measurements.

For measurements, one of the standard supplied Permanent Link measurement adapters (P/N 228011) is used on one measurement instrument. The second measurement instrument uses a Patch Cord Test adapter. Depending on the desired measurement category, a suitable Patch Cord Test adapter is available.

WireXpert Models
- WireXpert 4500 *(P/N 228070)*
- WireXpert 500 Plus *(P/N 228144)*
- WireXpert 500 *(P/N 228071)*

or
- WireXpert 500-MMEF (P/N 228145)
- WireXpert 500-SM (P/N 228146)
- WireXpert 500-QUAD (P/N 228147)

plus
- Upgrade P/N 228138 to measure up to 500 MHz on copper

Permanent Link Adapter
- P/N 228011
- Included in standard delivery
- Only 1 piece required

Patch Cord Test Adapter (single piece)

Cat5e
- P/N 228278
- P/N WX_AD_5e_PCORD1

Cat 6
- P/N 228277
- P/N WX_AD_6_PCORD1

Cat 6A
- P/N 228276
- P/N WX_AD_6A_PCORD1

- Choose matching category
- Only 1 piece required

Test Setup with the WireXpert Series

Basic instrument setup

After starting a WireXpert equipped with the corresponding measurement modules, the following menu screen appears for configuration of measurements. The screen is divided into the following information and settings blocks: Below example shows the setup for EIA/TIA, similar standards are available for ISO/IEC as well.

1. The status bar shows the currently set date and time, the connection status of the devices and the headset status. In addition, the battery or charging indicator is displayed. Touching the icons opens the associated settings and info menus
2. The **"Quick Setup"** allows a quick selection of test settings (selected measurement standards and components) to rapidly perform tests
3. The **"Test Settings"** provides the detailed settings for test limits and components used.
4. The **"Project Settings"** defines settings related to the storage and management of measurement results.
5. The **"System Settings"** allow a basic configuration of the device, such as language, date, time, etc.

The desired selection of the **"System Settings**" and **"Project Settings"** is already assumed to have taken place.

Selection of matching Test Limit and enabling the use of different measurement adapters to match the topology of the MPTL link

All WireXpert models that are suitable for measurements on copper data links can directly perform the MPTL measurements as of firmware version 7.4 build 972 or higher. The required measurement test limits and topology are easily set in 6 steps starting from the initial boot screen.

Measurements

Typical Test Setup

Any measuring device, LOCAL or REMOTE, can be equipped with a Patch Cord Test adapter that corresponds to the desired category of the measurement, the second device has to be equipped with a standard Permanent Link adapter.

Test Report

When evaluating the MPTL measurements and creating the measurement reports via eXport data management software, there are no special considerations to be taken care of. All usual output styles and formats are available. Any required re-certification against a different performance category is only possible within the MPTL standards.

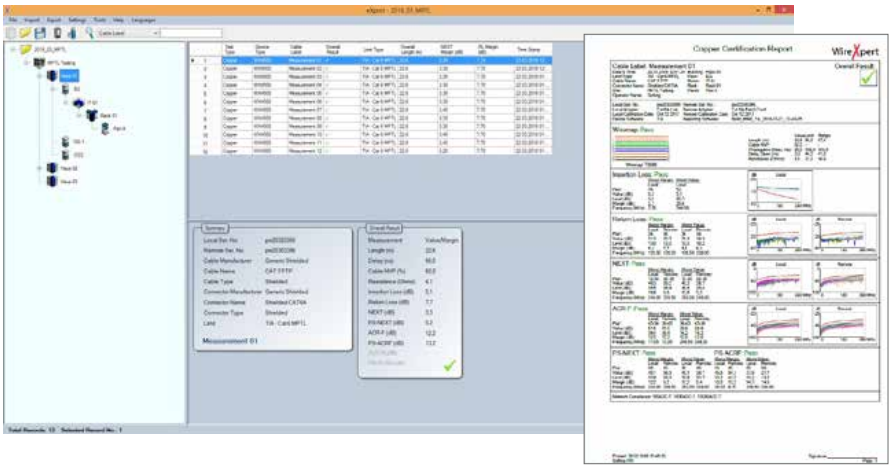

Alfred Huber
Technical Manager

Softing IT Networks GmbH
Richard-Reitzner-Allee 6
D-85540 Haar
Tel: +49 (0) 89/45656-612
Fax: +49 (0) 89/45656-656
Email: alfred.huber@softing.com

About Softing IT Networks

Softing IT Networks, formerly Psiber Data, was founded in 2003 and has been part of Softing AG since 2014. Softing IT Networks is a leading manufacturer of electronic measuring devices for the performance qualification, certification and documentation of complex IT cabling systems. The handy and easy-to-use devices are extremely robust and deliver highly accurate measurement results. This makes the measuring devices ideal for finding and detecting errors. Softing IT Networks is also involved in the development of technological standards and norms, meaning it is always up to date.

In addition to its position as a technology pioneer in the field of metrology for IT cabling, the company stands out with its fair pricing policy. In the WireXpert series, for example, customer-friendly investment protection comes into play. This means that the customer has a cost-effective option in the device family which can be easily upgraded if requirements increase. This eliminates the need to purchase a new device. This flexibility only exists with Softing IT Networks.

Whether for buildings, data centers, industrial environments or the automotive industry: With professional metrology equipment from Softing IT Networks, the performance of data communications is advanced and ensured through faster, more secure connections throughout the life cycle of the network. Softing IT Networks attaches great importance to personal and expert advice. For any questions about all devices, the customers receive assistance from the technicians from the company headquarters in Haar near Munich.

Single pair cabling has the potential to open up completely new fields of application for devices connected via Ethernet. Single Pair Ethernet overcomes many previous limitations of Ethernet copper cabling and not only has an impact on industrial and automotive applications, but will also enable new areas in commercial LAN cabling and building automation. These new cabling structures must be continuously testable. Softing IT Networks offers technologically leading measuring and solutions.

Learn more about the products, services, and distribution of Softing IT Networks:
itnetworks.softing.com

Softing IT Networks GmbH
Richard-Reitzner-Allee 6
85540 Haar
Germany
Tel: +49 89 45 656 660
Fax: +49 89 45 656 656
E-Mail: info.itnetworks@softing.com

Rev. 2018-2021_05_EMEA

IT Networks